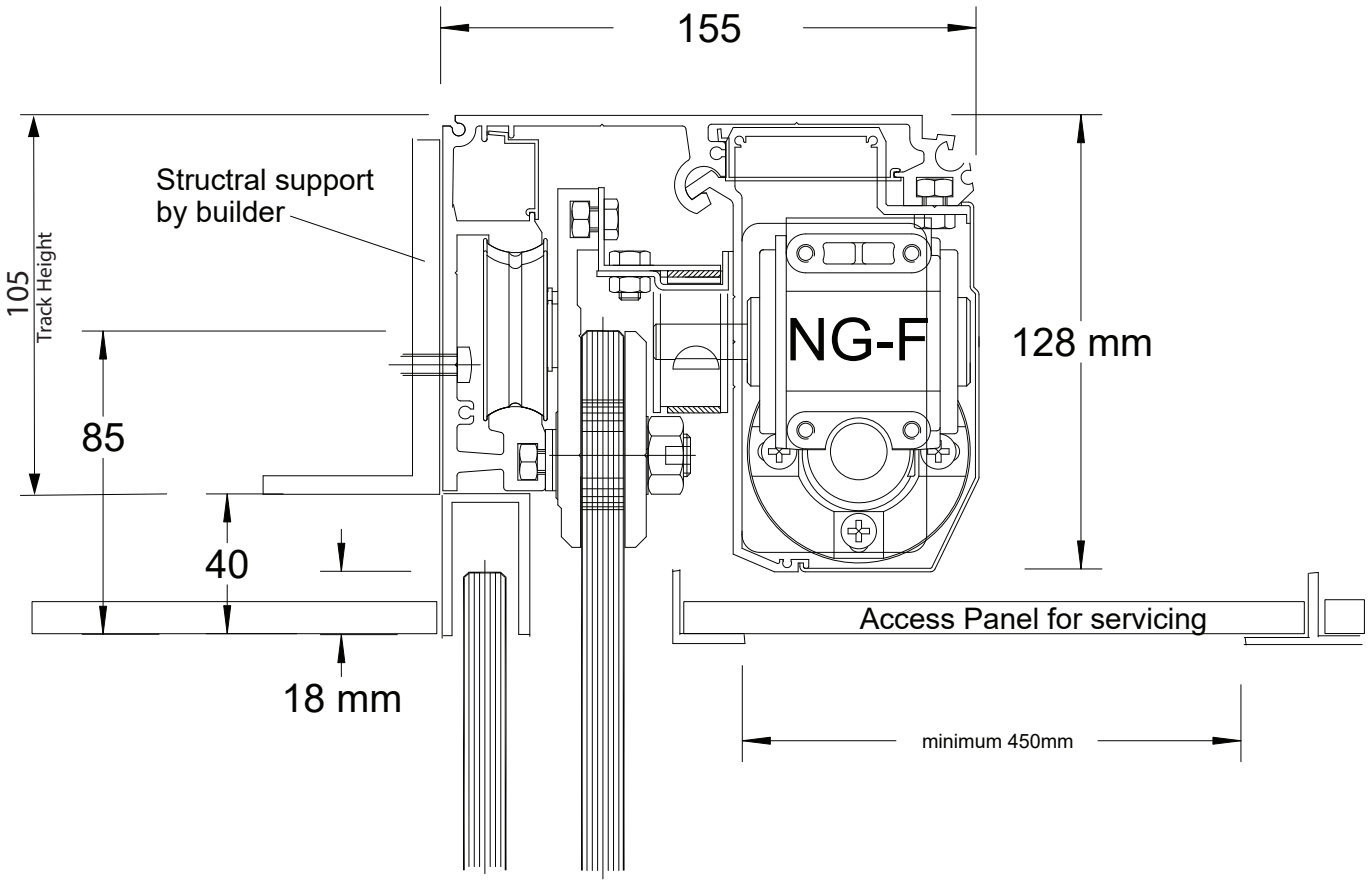

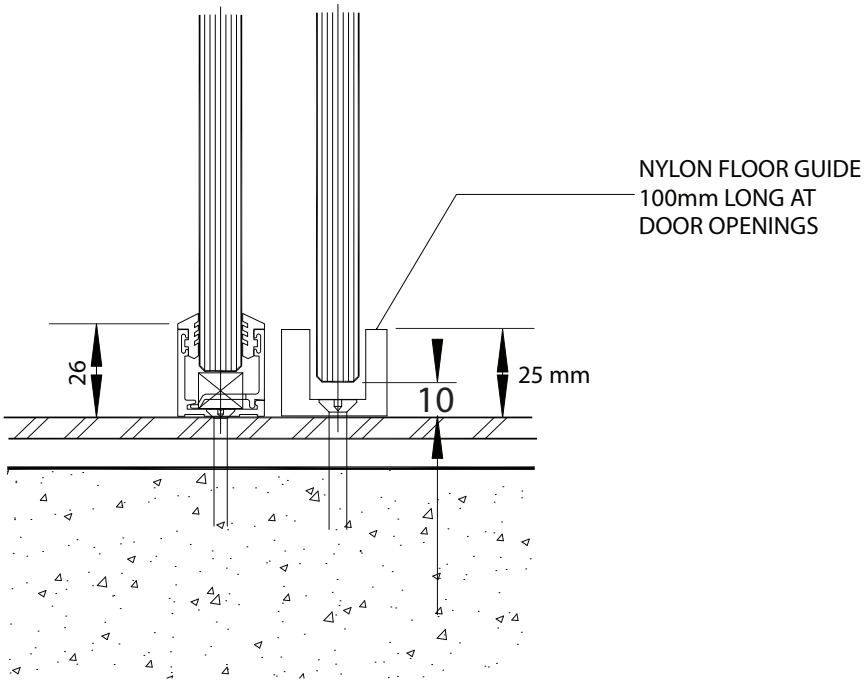

ADIS AUTOMATIC DOORS	SCALE Not to Scale	TITLE ADIS NGF Concealed in Ceiling
	DATE July 2019	
	DRAWING NUMBER	